Ï 101 Steel Round Bollard

Lacuna | Surface Mounted

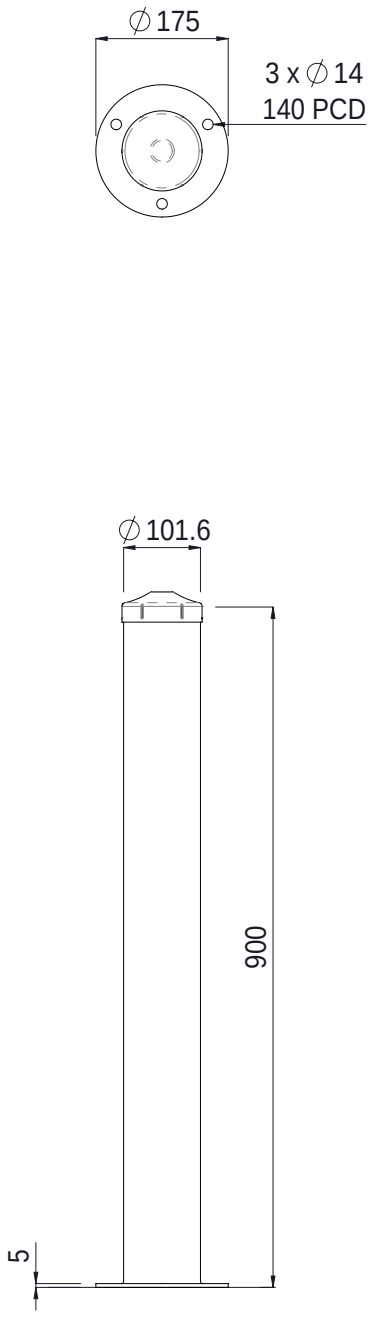

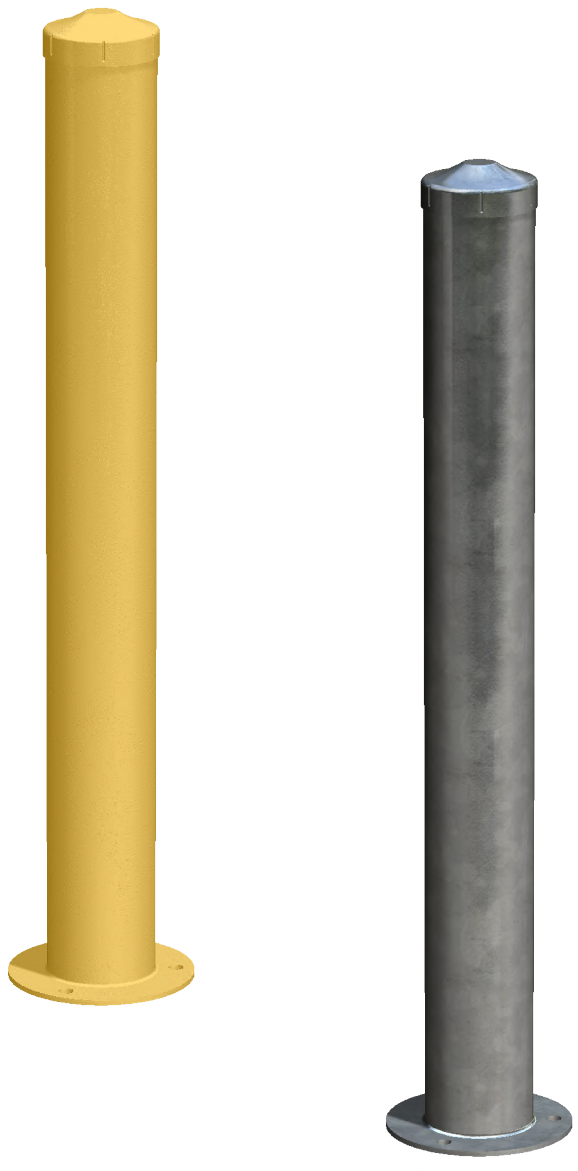

Colours / finishes shown are indicative only and may differ in reality.

SPECIFICATIONS

Code	M101R-900PRGS - Hot Dip Galv M101R-900PRPS - Galv Powdercoat
Material	Mild Steel
Height	900mm Above Ground
Diameter	Ø101.6 x 3.2mm Wall Tube
Base Plate	Ø175 x 5mm Thick
Weight	8 Kg
Mounting	Bolt Down with 3 x M12 Dynabolts

FEATURES

- Knock-on cap (can be filled with concrete post installation)
- Hot Dip Galvanised for long life
- Can be Powdercoated a range of colours

- Bollards are not supplied with installation instructions, install fastenings or footing details. These are to be specified and determined by the installing contractor for the specific requirements of each site.