Mayfair Bin

Colours / finishes shown are indicative only and may differ in reality.

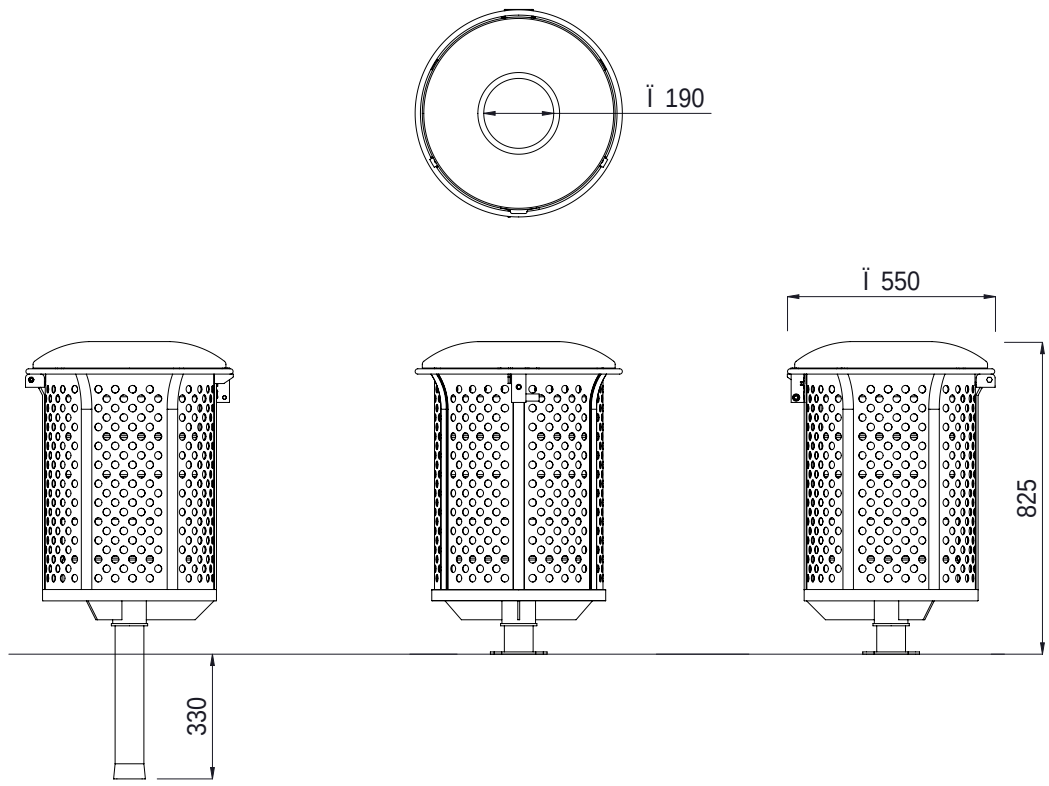

	MATERIALS	FINISHES	FINISH OPTIONS
Steelwork	• Stainless steel 304 or 316 grade • Stainless steel or mild steel • Galvanised liner as standard - 60L • Mild steel mounting base	• Electropolished as standard • Powdercoated as standard • Hot dip galvanised as standard	• Electropolished lid, frame, wrap • Electropolished lid, frame and powdercoated wrap • Electropolished lid, powdercoated frame and wrap
Hardware / Fasteners	• Stainless steel		

OPTIONS	DIMENSIONS	WEIGHT
• Plant or Surface mounted • Ashtray lid option	• Ø550 x 825H as standard	• 35Kg

- Made to order and can be customised to suit clients requirements.
- Furniture is not supplied with installation instructions, install fastenings or footing details. These are to be specified and determined by the installing contractor for the specific requirements of each site.